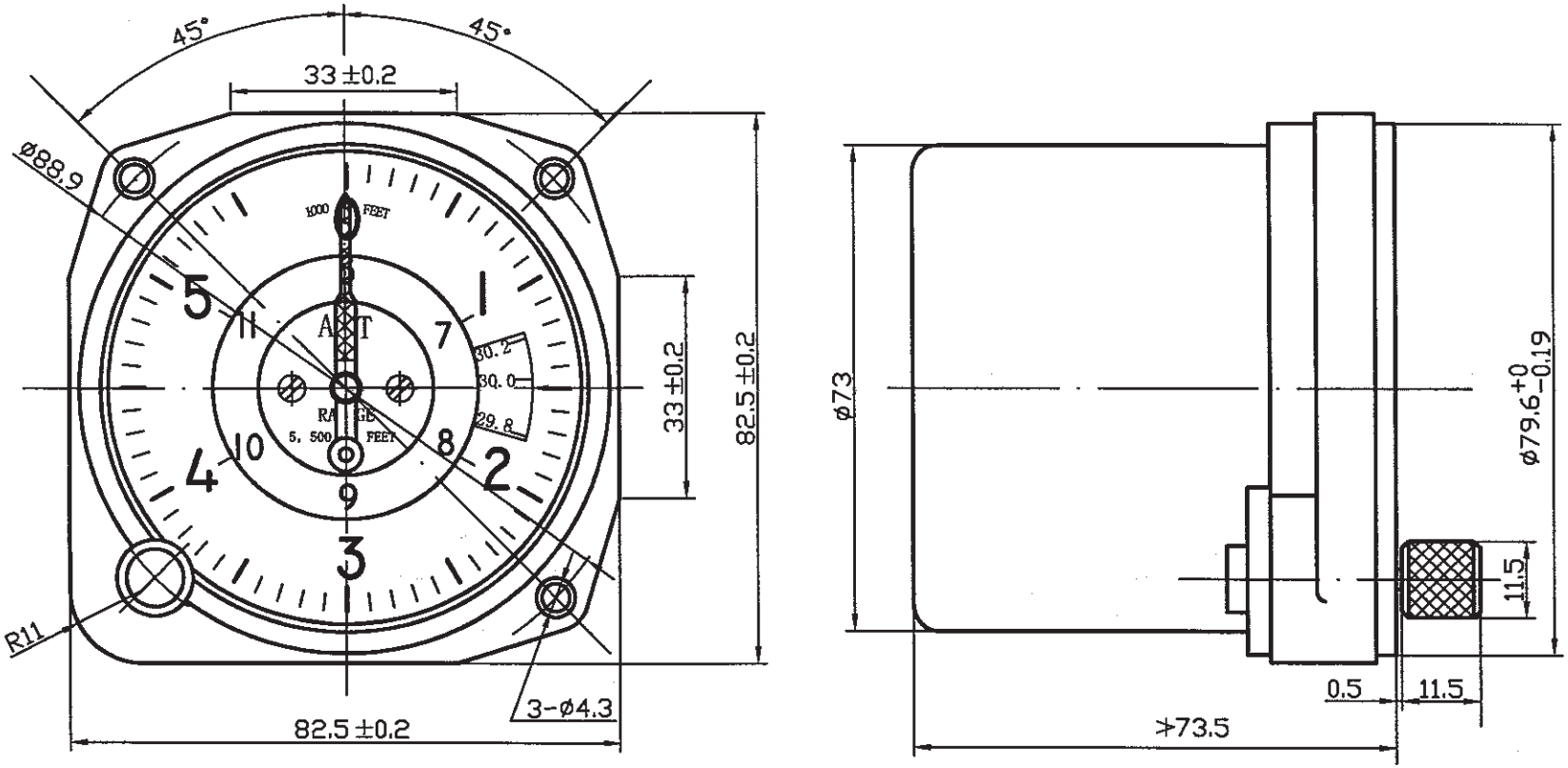

Note: Size unit mm

3-1/8″ Type BG-12 Non Sensitive Altimeter Outside View

Light Aircraft Instruments

AIR TEAM, s.r.o.
Airport Brno-Medlanky
621 00 Brno
Phone: +420 725 508 058
Email: info@lightaircraftinstruments.eu
Web: www.lightaircraftinstruments.eu